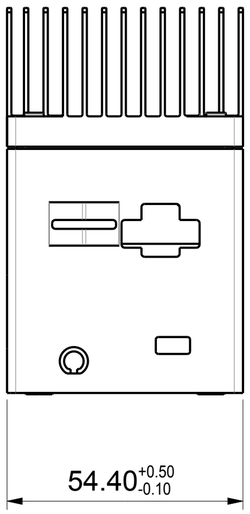

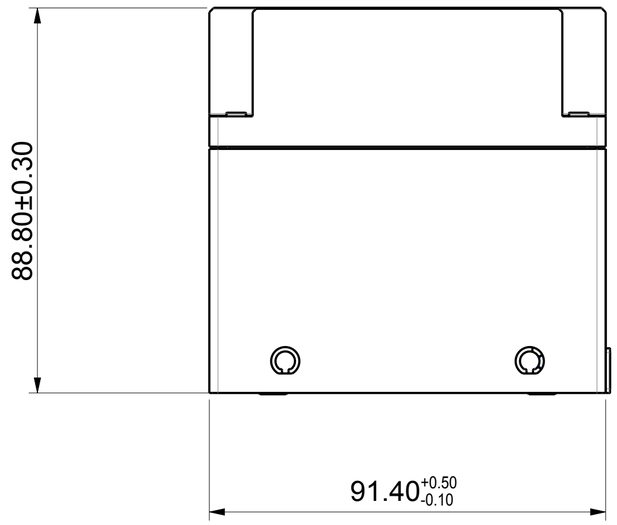

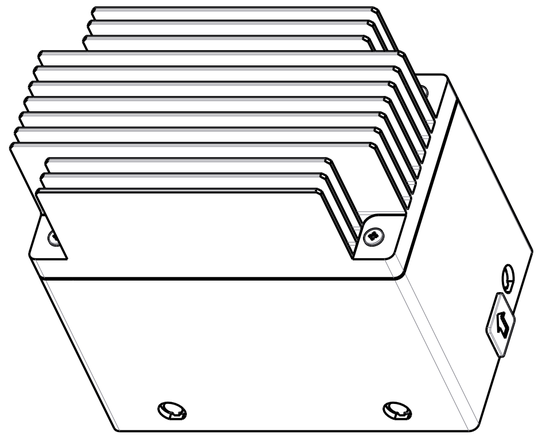

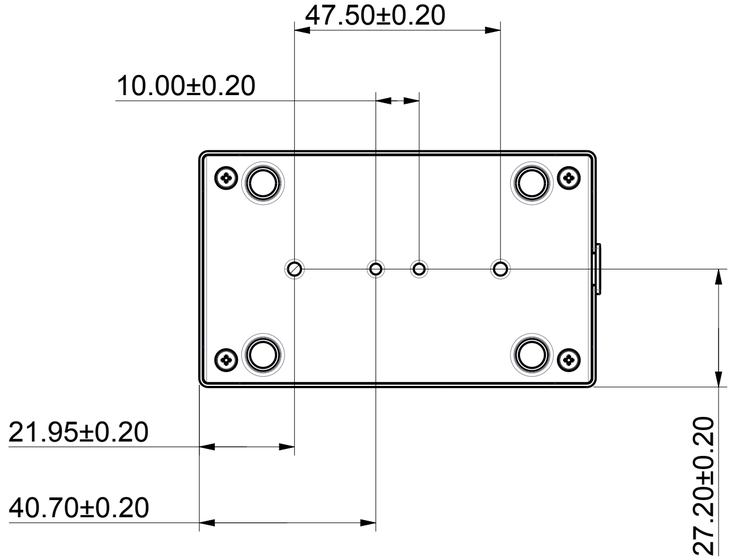

NOTE:

1. DE-BURR EGDE AS INDICATED
   BURR HIGHT LESS 10 % THICKNESS .
2. QUALITY CONTROL DIMENSION MARK IN ' '.
3. ALL MATERIAL USED IN THE CONSTRUCTION OF THIS COMPONENT OR ASSEMBLY(INCLUDING RAW STOCK, COATINGS, HARDWARE, GASKET ETC.) SHALL COMPLY WITH THE LATEST REVISION OF SHUTTLE RoHS-COMPLIANT SPECIFICATION.
4. ALL OF SURFACE SHOULD BE DEGREASED.

ITEM	CONTENS OF CHANGE	RVS	CHK	APV	D/M/Y

TOL± / RANGE	M1	M2	S1	S2	P1	P2	C	B
0~6	0.05	0.1	0.15	0.2	0.05	0.1	0.5	0.15
6~30	0.1	0.2	0.15	0.25	0.1	0.15	1	0.15
30~80	0.15	0.25	0.2	0.3	0.2	0.4	2	0.25
80~180	0.15	0.3	0.25	0.45	0.4	0.8	3	0.25
180~315	0.2	0.5	0.4	0.6	0.6	1.2	4	0.3
315~800	0.3	0.8	0.7	1.1	0.8	1.5	5	0.5

		MATERIAL		DATE	19-12-26	SHEET	1	TOTAL SHEETS	1	REV
UNIT	mm	SCALE	1.000	DRAWING NAME	ASM_NUC_NEW_ALL				
DESIGN		CHECKED		APPROVED		PART NO.			
FALSE				MODEL NAME	EN01J	SHUTTLE			