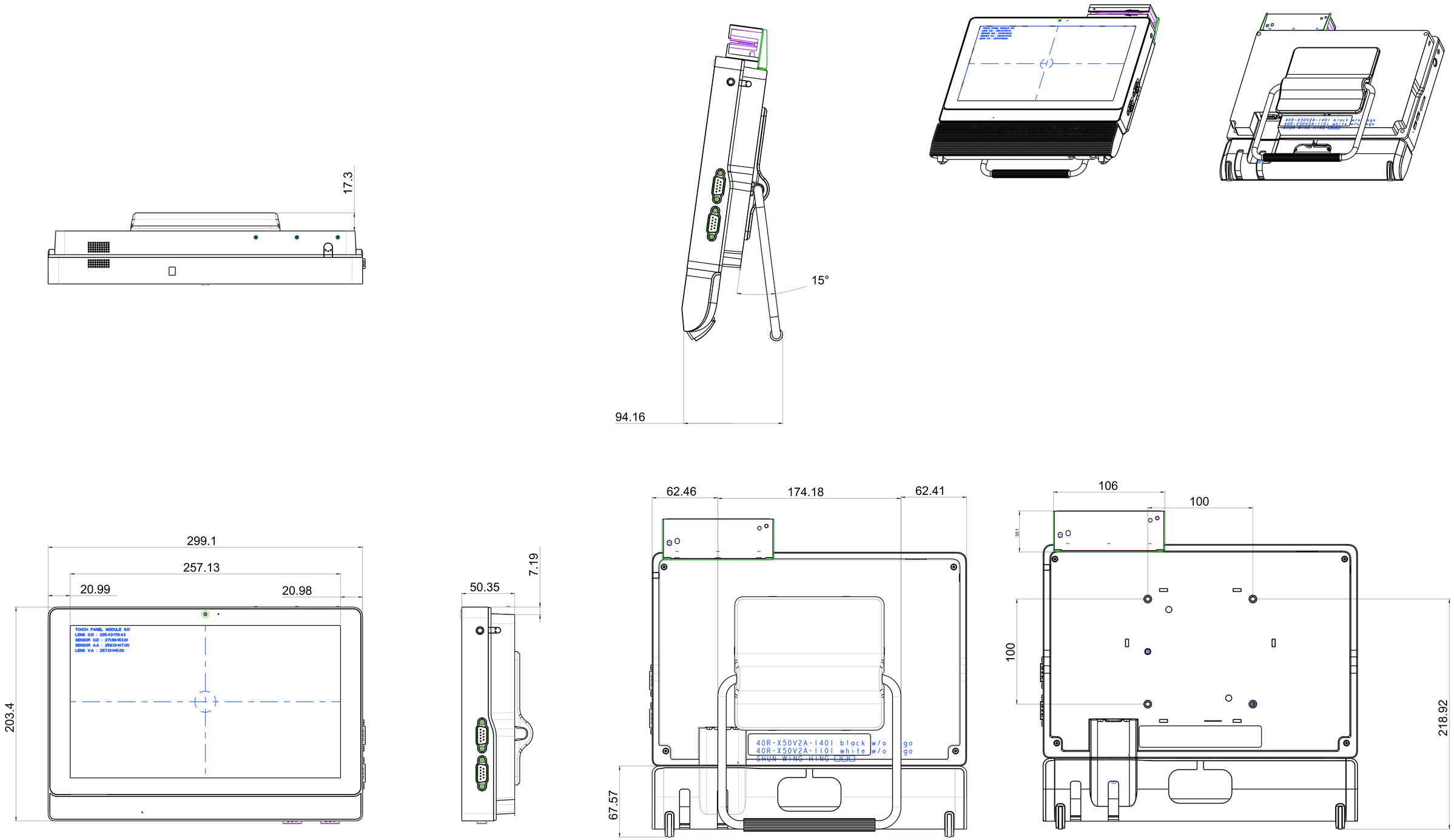

SCALE 4/5

ITEM	CONTENS OF CHANGE	RVS	CHK	APV	D/MY

TOL± RANGE	M1	M2	S1	S2	P1	P2	C	B
0~6	0.05	0.1	0.15	0.2	0.05	0.1	0.5	0.15
6~30	0.1	0.2	0.15	0.25	0.1	0.15	1	0.15
30~80	0.15	0.25	0.2	0.3	0.2	0.4	2	0.25
80~180	0.15	0.3	0.25	0.45	0.4	0.8	3	0.25
180~315	0.2	0.5	0.4	0.6	0.6	1.2	4	0.3
315~800	0.3	0.8	0.7	1.1	0.8	1.5	5	0.5

MATERIAL		DATE	18-08-09	SHEET 1	TOTAL SHEETS 1 REV.
UNIT mm	SCALE 1/1	DRAWING NAME			
DESIGNED	CHECKED	APPROVED	PART NO.		
			MODEL NAME	SHUTTLE	